INSTRUCTION MANUAL
AC2516
REVISION E

INSTALLER: PLEASE LEAVE THIS MANUAL FOR THE OWNER'S USE.

Series 1580 In-Line Mounted Centrifugal Fire Pumps

FIRE PUMP

DESCRIPTION

The Series 1580 Inline Centrifugal Fire Pump is a close coupled pump which features – high efficiency, rugged construction, and in-line mounting. These features make installation, operation and service easy to perform.

OPERATIONAL LIMITS

Unless special provisions have been made for your pump by AC Fire Pump Systems, the operational limits for Series 1580 Pumps are as follows:

MAXIMUM WORKING PRESSURE

Reference engineering data.

SEAL OPERATING LIMITS

PACKING

PH Limitations 7-9; Temperature Range 0 to +200°F

WARNING This product can expose you to chemicals including Lead which is known to the state of California to cause cancer or birth defects or other reproductive harm. For more information go to: www.P65Warnings.ca.gov.

SAFETY INSTRUCTIONS

This safety alert symbol will be used in this manual and on the unit safety instruction decals to draw attention to safety related instructions. When used, the safety alert symbol means ATTENTION! BECOME ALERT! YOUR SAFETY IS INVOLVED! FAILURE TO FOLLOW THESE INSTRUCTIONS MAY RESULT IN A SAFETY HAZARD.

Your Series 1580 Inline Mounted Centrifugal Fire Pump should have the following safety instructions decals approximately as shown. If the decals are missing or are illegible contact your local AC Fire Pump Systems representative for a replacement.

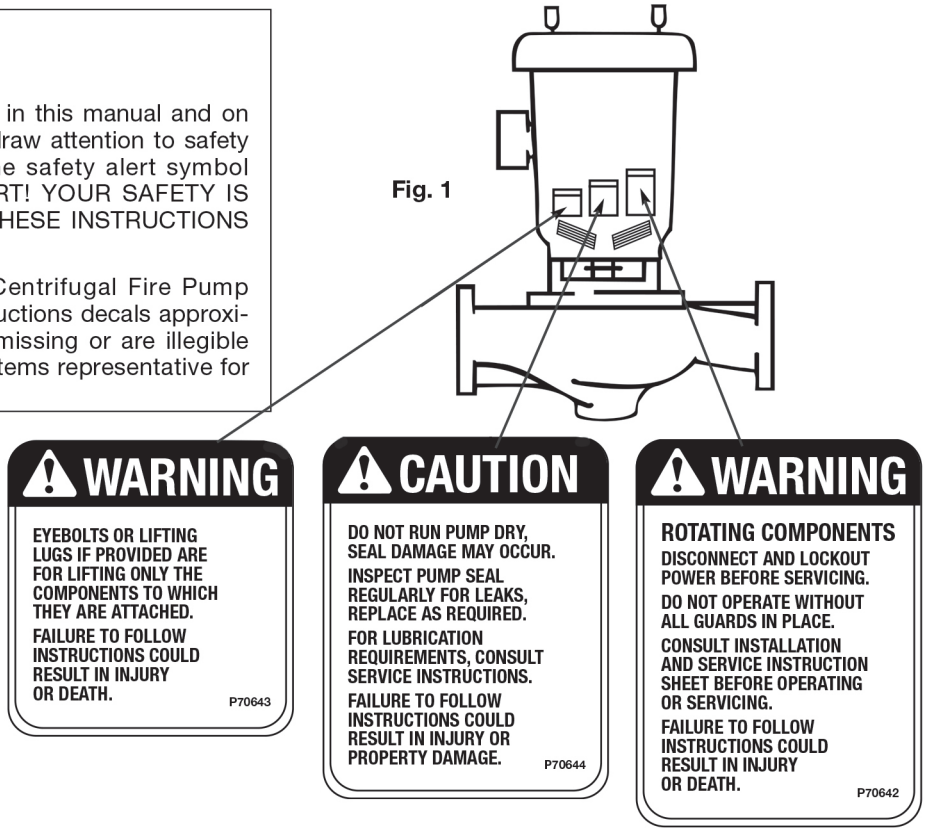

Fig. 1

ADDITIONAL SAFETY REQUIREMENTS:

ELECTRICAL SAFETY:

WARNING: Electrical Shock Hazard
Electronical connections to be made by a qualified electrician in accordance with all applicable codes, ordinances, and good practices. Failure to follow these instructions could result in serious personal injury or death, and property damage.

WARNING: Electrical Overload Hazard
Three phase motors must have properly sized heaters to provide overload and under voltage protection. Single phase motors have built-in overload protectors. Failure to follow these instructions could result in serious personal injury or death, and property damage.

THERMAL SAFETY:

WARNING: Extreme Temperature Hazard
If pump, motor, or piping are operating at extremely high or low temperature, guarding or insulation is required. Failure to follow these instructions could result in serious personal injury or death, and property damage.

MECHANICAL SAFETY:

WARNING: Unexpected Startup Hazard
Disconnect and lockout power before servicing. Failure to follow these instructions could result in serious personal injury or death, and property damage.

WARNING: Excessive System Pressure Hazard
The maximum allowable pressure of the pump is listed on the nameplate, do not exceed this pressure. Failure to follow these instructions could result in serious personal injury or death, and property damage.

WARNING: Excessive Pressure Hazard Volumetric Expansion
The heating of water and other fluids causes volumetric expansion. The associated forces may cause failure of system components and release of high temperature fluids. This will be prevented by installing properly sized pressure relief valves. Failure to follow these instructions could result in serious personal injury or death, and property damage.

PUMP LOCATION

Locate the pump so there is sufficient room for inspection, maintenance and service. If the use of a hoist or tackle is needed, allow ample head room.

> **WARNING: Falling Object Hazard**
> Eyebolts or lifting lugs if provided are for lifting only the components to which they are attached. Failure to follow these instructions could result in serious personal injury or death, and property damage.

If lifting of the entire pump is required, do so with slings placed around the pump assembly as shown in Fig. 2A. Or if your pump configuration looks like Fig. 2B, connect a nylon sling, wire rope or chain to the brace ribs on the motor adapter. Use one sling for each rib. Attach all slings together at least 2 ft, above the top of the pump.

> **CAUTION:** Some pumps may have the center of gravity at, or slightly above, the lift point. This may create a tipping hazard. To avoid this hazard securely bind the lifting lines to the side of the motor using a strap or chain wrapped securely around the top of the motor. Unit should only be lifted vertically. Failure to follow these instructions could result in serious personal injury or death, and property damage.

Special precautions to avoid sound and vibration transmission should be taken if the pump is to be located near a noise sensitive area, a sound specialist should be consulted.

If the pump is not on a closed system, it should be placed as near as possible to the source of the liquid supply, and located to permit installation with the fewest number of bends or elbows in the suction pipe.

The installation must be evaluated to determine that the Net Positive Suction Head Available (NPSHA) meets or exceeds the Net Positive Head Required (NPSHR), as stated by the pump performance curve.

Fig. 2A

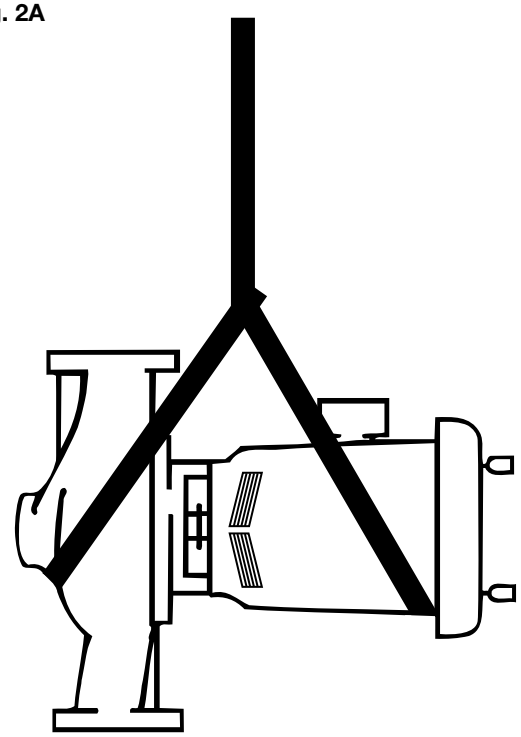

Fig. 2B

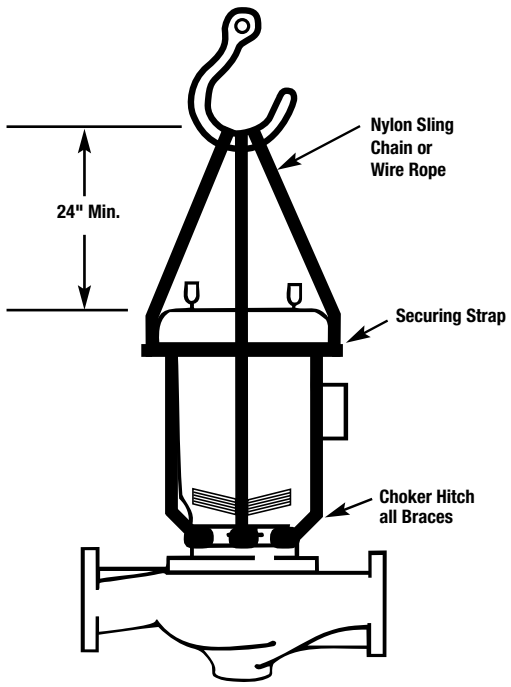

PIPING

Always install a section of straight pipe between the suction side of the pump and first elbow. This reduces turbulence of the suction by straightening out the flow of liquid before it enters the pump. The length should be equal to five times the diameter of the pipe.

Be sure to eliminate any pipe-strain on the pump. Support the suction and discharge pipes independently by use of pipe hangers or ground supports close to the pump. A support can be bolted to the underside of the pump body but it must be so constructed as to allow freedom of movement with the normal expansion of the piping.

If the pump is to be mounted in vertical piping with the motor in the horizontal position provide adequate support to prevent strain on pump parts and piping. It is not recommended that pump be mounted with the motor vertically downward. Do not use motor lift rings as a means of suspending the pump.

Line up the piping so that the bolt-holes in the pump flanges match the bolt-holes in the pipe flanges. DO NOT ATTEMPT TO SPRING THE SUCTION OR DISCHARGE LINES INTO POSITION. Bearing wear will result if suction or discharge lines are forced into position. The code for Pressure Piping (A.S.A.B. 31.1) lists many types of supports available for various applications.

As a rule, ordinary wire or band hangers are not adequate to maintain alignment. It is very important to provide a strong, rigid support for the suction and discharge lines.

Where considerable temperature changes are anticipated, fittings for absorbing expansion should be installed in the system in such a way as to avoid strain on the pump.

NOTES:

1. The pipeline should have isolation valves around the pump and have a drain valve in the suction pipe.

ROTATION

Pump rotation is clockwise when viewed from back of the motor. An arrow is provided to show direction of rotation.

GENERAL INSTRUCTIONS

1. Keep the motor properly lubricated.
2. When there is a danger of freezing, drain the pump.
3. Inspect pump regularly for leaky seals or gaskets and loose or damaged components. Replace or repair as required.

LUBRICATION

Your Series 1580 Inline Fire Pump has been lubricated at the factory, future lubrication should be in accordance with the motor manufacturers instructions.

PRIMING AND STARTING

CAUTION: Seal Damage Hazard
Do not run pump dry, seal damage may occur. Failure to follow these instructions could result in property damage and/or moderate personal injury.

Before starting the pump, the pump body must be full of liquid. Manual priming may be required if the system does not automatically fill the pump body with liquid. Vent plugs are provided on the pump body to vent the air. While venting the air from the pump body, the pump shaft should be rotated a few times by hand.

The pump should be started with the discharge valve closed and the suction valve fully open. After the pump is up to operating speed the discharge valve should be opened slowly.

IMPORTANT: The pump should never be operated with the suction valve closed or throttled. This could result in cavitation. Cavitation will cause the pump performance to fall-off and also, overtime, can cause impeller and/or casing damage.

FIGURE 5
CROSS SECTION OF SERIES 1580 INLINE MOUNTED CENTRIFUGAL FIRE PUMP

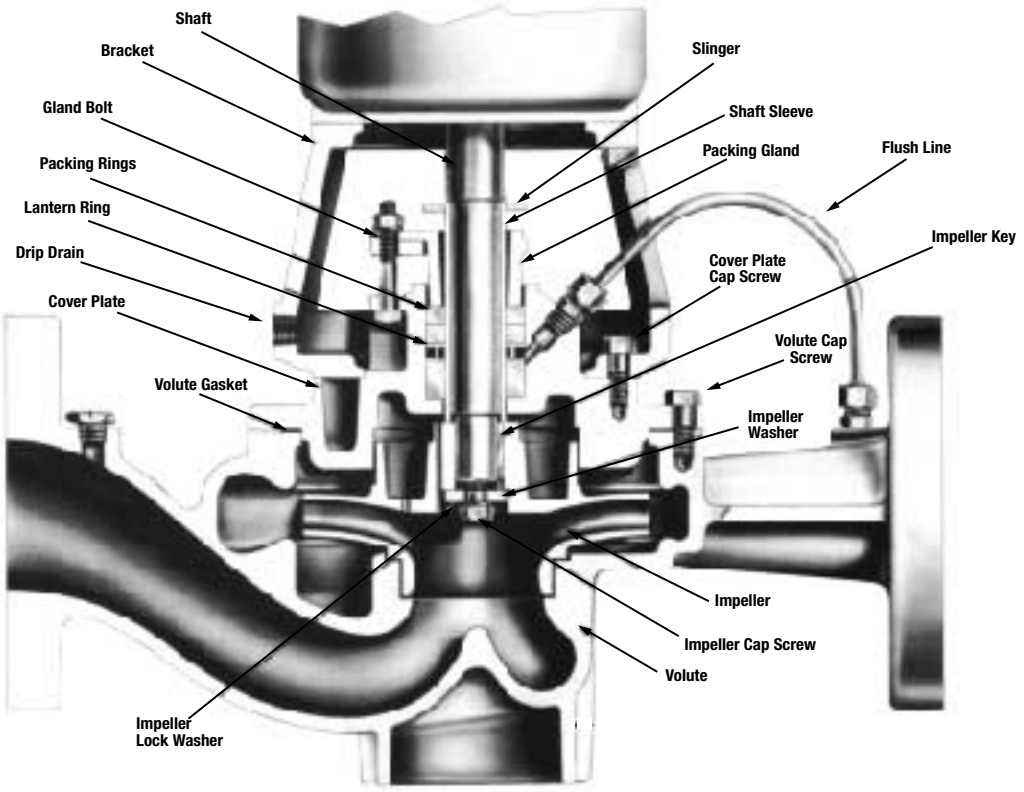

NOTE: On 6x6x9$^1/_2$ and 6x6x11 there will be volute and stuff box wear rings.

SERVICE INSTRUCTIONS

WARNING: Unexpected Startup Hazard
Disconnect and lock out power before servicing. Failure to follow these instructions could result in serious personal injury or death, and property damage.

1. Close valves on suction and discharge sides of pump. (If no valves have been installed, it will be necessary to drain the system).

Caution: Extreme Temperature Hazard
Allow pump temperature to reach acceptable level before proceeding. Open drain valve, do not proceed until liquid stops coming out of drain valve. If liquid does not stop flowing from drain valve isolation valves are not sealing and should be repaired before proceeding. After liquid stops flowing from drain valve, leave drain valve open and continue. Remove the drain plug located on the bottom of the pump volute. Do not reinstall plug or close drain valve until reassembly is completed. Failure to follow these instructions could result in moderate personal injury or property damage.

2. Loosen volute capscrews, do not remove them. Using capscrews in the jack screw holes start to remove the pump assembly from the volute.

WARNING: Excessive System Pressure Hazard
Make certain the internal pressure is relieved before continuing. Failure to follow these instructions could result in serious personal injury or death, and property damage.

3. Remove seal flushing tube, if used.
   Remove the volute capscrews and remove the pump assembly from the volute.
4. Remove the impeller capscrew, lock washer and washer. Remove the impeller.

STUFFING BOX CONSTRUCTION WITH PACKING

1. Remove hex nuts from packing gland and remove coverplate capscrews. Remove coverplate from bracket.
2. Remove packing rings from the stuffing box.
3. Check condition of shaft sleeve and replace if scored or otherwise damaged. **Note:** Replace gasket between sleeve and impeller as well if damaged.
4. Insert two packing rings in the stuffing box followed by the lantern ring and then the remaining two pieces of packing. Make certain that the packing joints are staggered 90 degrees.
5. Install, but do not tighten the packing gland.
6. On the 6x6x9$^1/_2$ and the 6x6x11 pumps the volute and coverplate have rings. Inspect and replace if necessary.
7. Install coverplate over the pump shaft, tighten capscrews (per torque chart).
8. Tighten packing gland to compress packing.
9. Install impeller, impeller gasket, impeller washer, lock washer and capscrew, then tighten (per torque chart).
10. Install new volute gasket then install pump assembly into volute. Tighten volute capscrews (per torque chart). Install seal flushing tube. Install drain plug, close drain valve.
11. Open isolation valves, inspect pump for leaks, if not leaking return pump to service. (See note for packing adjustment.)

NOTE:

Before starting pump, back off packing gland nuts or screws until glands are loose. Re-tighten with fingers until glands are just snug against the first packing ring. After pump is running at first start, water may run freely from packing. This is normal and should be allowed to continue for a period of time before further tightening of the glands. Take up gland bolts uniformly, one flat at a time.

An adequate leakage rate is not one single value for all pumps and installations, but is the amount required to provide adequate cooling and lubrication. The required leakage will be largely influenced by operating pressure, fluid temperature, shaft speed, etc.

For fluid temperatures in the range of 32° to 190°F, average leakage rates of 60 to 80 drops per minute are recommended. However, each individual pump and installation will have unique operating conditions that will result in broadly variable leakage rate requirements.

At fluid operating temperatures near the upper limit of 190°F, the maximum temperature rise of the leakage is particularly important. A packed pump should never operate with steam forming at the gland. This necessarily limits the temperature rise to a maximum of about 20°F. If the formation of steam persists at higher leakage rates, cooling water must be provided by means of an external supply, or a heat exchanger used to cool the by-pass flush.

CAPSCREW TYPE	HEAD MARKING	CAPSCREW TORQUE (FOOT-POUND)								
		CAPSCREW DIAMETER								
		1/4	5/16	3/8	7/16	1/2	5/8	3/4	7/8	1
SAE Grade 2		6	13	25	38	60	120	190	210	300
Brass Stainless Steel	or	4	10	17	27	42	83	130	200	300
SAE Grade 5		10	20	35	60	90	180	325	525	800
SAE Grade 8		13	28	46	75	115	225	370	590	895

DEALER SERVICING

If trouble occurs that cannot be rectified contact your local AC Fire Pump Systems representative. He will need the following information in order to give you assistance.

1. Complete nameplate data of pump and motor.
2. Suction and discharge pipe pressure gauge readings.
3. Ampere draw of the motor.
4. A sketch of the pump hook-up and piping.

RECOMMENDED SPARE PARTS

The pumps covered by this manual have been designed and built with certain replaceable wearing parts. The recommended inventory of spare parts depends upon the installation and the importance of continued operation.

For normal service, with repairs to be made in the field, the following parts are recommended for stock.

1 set of packing rings (complete)
1 shaft sleeve
2 sets of wearing rings (if provided)
1 set of gaskets
1 lantern ring

Parts should be ordered as far in advance of their use as possible since circumstances beyond the control of the company may reduce existing stock. Not all parts are stocked and must be manufactured for each order.

To facilitate rapid handling of your order for spare parts, be sure to include the following information:

1. Serial number of the pump.
2. Quantity of each part.
3. Name of part.
4. Material desired. (Parts will be furnished in original materials unless specified as a material change. All material substitutions should be discussed with the factory.)

PRODUCT WARRANTY

COVERAGE

A-C Fire Pump undertakes to remedy defects in their products under these conditions:

- The faults are due to defects in design, materials, or workmanship.
- The faults are reported to a local sales and service representative within the warranty period, as described in the Terms and Conditions of Sale provided with the Sales Contract.
- The product is used only under the conditions that are described in this manual.
- The monitoring equipment that is incorporated in the product is correctly connected and in use.
- All service and repair work is performed by qualified personnel.

LIMITATIONS

The warranty does not cover defects that are caused by these situations:

- Deficient maintenance.
- Improper installation.
- Modifications or changes to the product that are made without consulting an A-C Fire Pump authorized representative.
- Incorrectly executing repair work.
- Normal wear and tear.

A-C Fire Pump assumes no liability for these situations:

- Bodily injuries.
- Material damages.
- Economic losses.

WARRANTY CLAIM

A-C Fire Pump products are manufactured to the highest quality standards with expected reliable operation and long life. However, should the need for a warranty claim arise, contact your local sales and service representative.

APPLICATIONS

A-C Fire Pumps are designed to provide water to stand pipe, sprinkler, and hydrant systems for fire suppression in industrial and commercial facilities.

WARNING
Using the pump in an application other tha-nas described is considered improper use. A-C Fire Pump shall assume no liability for product that is used improperly.